Информация о сертификации

Наименование товара: Беспроводные наушники Terra ANC
Производитель: Шэньчжэнь Ченгуэ Инновейшн Технолоджи Ко., Лтд
Провинция Гуандун, Шэньчжэнь, район Лунхуа, Технопарк Цзиньруйчжунхэ, строение 3, 4/5F
Страна производства: Китай
Импортер/ Организация, принимающая претензии:
ООО Ф-Плюс Мобайл
Преображенская пл., д.8, этаж 27, пом. LXXXVI/1 Москва, Россия
Срок гарантии 1 год. Срок службы 2 года
Телефон горячей линии: 8-800-250-07-17
Гарантийное обслуживание:
ООО «Орион»
Россия, Москва, ул. Короленко, 8. тел. (495) 663-77-43, (495) 108-18-47
Адреса сервисных центров в других городах на сайте: http://www.accesstyle.ru/
Декларация о соответствии: ЕАЭС N RU Д-RU.PA01.B.64728/21
Дата выдачи: 13.05.2021, окончание действия: 12.05.2026
Декларация соответствия: ЕАЭС N RU Д-RU.PA01.B.85107/21
Дата выдачи: 26.05.2021, окончание действия: 23.05.2026
Дата изготовления изделия указывается на тыльной стороне упаковки в виде четырехзначного кода, где первые две цифры - месяц, а последующие две - год производства.

EAC

Terra ANC
беспроводные наушники

accesstyle

Руководство пользователя
User's manual
Օգտագործման ձեռնարկ
İstifadəçi təlimatı
ომხმარებლის სახელმძღვანელო
Пайдаланушы нұсқаулығы

Русский.................... 3
English...................... 14
Հայերեն.................... 24
Azərbaycan.............. 35
ქართული................ 44
Қазақша................. 55

Thank you for purchasing Terra ANC. Please read the manual carefully before use and keep it for further reference.

Specifications

Bluetooth version	5.2
BT distance	10m (with no obstacles)
Charging time (earphones)	~1.5 hours
Charging time (case)	~1.5 hours
Driver Sensitivity	103±3db
Speaker impedance	32Ω
Frequency Range	20Hz–20kHz
Stand-by time	~200h
Playing time	~4-5h
Battery type	Li-polymer
Bluetooth profiles	HFP, A2DP, HSP, AVRCP
Battery Capacity (earphone)	40mAh
Battery Capacity (case)	380mAh
Input voltage (case)	5V/0,5A
Dimensions of earphone	32.7 × 24.7 × 7 mm
Dimensions of case	61.5 × 46.7 × 24 mm
Weight earphone	4.2g*2
Weight charging box	43.8g

Package contents

1. Earbuds — 2 pcs.
2. USB Type-C charging cable — 1 pc.
3. Charging case — 1 pc.
4. Eartips — 6 pcs.
5. User manual — 1 pc.

Device Layout

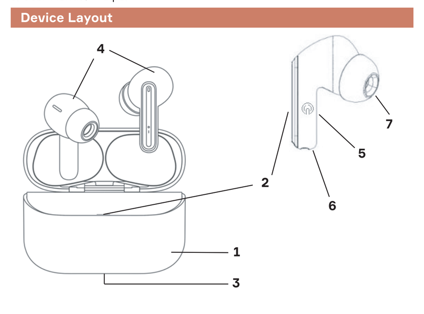

1. Charging case
2. LED indicator
3. Type-C charging port
4. Earbuds
5. Multifunction key (sensory)
6. Microphone
7. Speaker

Get comfortable

Terra ANC comes with 3 different sized pairs of eartips. Please use the right size for your ears (normally the medium sized eartips are suitable for most users).

Wearing the earphones

1. Place earbuds into your ears.
2. Adjust the earbuds until they are steady in your ears.

Charging the earphones

Terra ANC are equipped with a charging box which can be used both as a charging dock to charge the headphones and as a carrying case. With a built-in rechargeable battery, the charging case can provide charging process up to 2¬–3 times for the earphones (both left and right).
Please make sure the earphones are fully charged before the first use.
Please place the earbuds into corresponding charging slots, and press earbuds lightly to make sure the charging contact pins are match well for charging.

Charging the case

Before the first use, please put the earbuds into charging case.
Connect one end of the USB cable to a Type-C port of the case.
The other end should be connected to a power adapter (or a USB port of your computer). Then plug the power adapter into a power outlet.
Use only working charger with sufficient power.
Note: a power adapter is not supplied with the earphones and should be purchased separately!
Pay attention
In case you do not use the earphones for a long time, charge the earphones at least once every 3 months.

Pairing

The right (R) and left (L) earbuds can work together (Stereo mode).
Any earbud can work as an independent earphone (Mono mode).
The earbuds would enter pairing mode automatically after you open the case lid, or you long press earbud multifunction button. Open your phone's Bluetooth connections manager, find "Terra ANC" in the list of detected Bluetooth-devices and click it to connect.
Terra ANC will remember last paired device and attempt to connect with it automatically after next power on.
To clear pairing records / reset earbuds, open the case with earphones in the charging case. Press the button on the charging compartment for 10 seconds to clear the pairing record. After the red and white lights are on for 1 second, the red light is on for 2 seconds.
Pay attention: It takes about 30 seconds to pairing successfully for the first time pairing.

Stereo mode

Take out earbuds from the case. If earbuds' indicator flashes white, they're in pairing mode. Pair them with the device first. After pairing they will connect to last paired device automatically after power on. If they did not, then open Bluetooth manager on the phone and choose "Terra ANC" in Bluetooth device list to connect.

Mono mode

Take one earbud out of the charging case: the indicator will flash. "Terra ANC" will appear in Bluetooth-device list, click this item to connect. If you have previously paired earbud to Bluetooth device, you can just turn on Bluetooth on your device and take out the earbud from the charging case, it will connect automatically

Active noise canceling

Hold the right earbud's button for two seconds to switch between Noise Canceling and Sound Transparency modes. This tech analyzes surround noise and adjusts sound to suppress noise (Noise Canceling), or to hear surroundings clearer (Sound Transparency).

Environmental noise canceling

While using earbuds as headset, ENC technology is activated. It analyzes surround noise and suppresses it to make your voice sound clearer and eliminate surroundings.

Pay attention!
If pairing device is switched off or Bluetooth is disabled for 5 minutes, the earphones will turn off automatically.
Maximum operation range for the earphones is 10 meters. If you move out of the range, you will lose the connection. To restore the connection you have to move back to operation range and reconnect the device.

LED indicator

LED indicator can help to understand what is going on with the earbuds

Indicator	Status
The indicator on the case blinks white	The earbuds are charging
The indicator on the case turns off	The earbuds are fully charged
The indicator on the case blinks red	Case battery is lower than 20%
The indicator on the case is always on red light	Case is charging
The indicator on the case is always on white light	Case is fully charged
The earbuds indicator lights white every five seconds	Pairing mode

Controls

After the connection you can control media and phone calls from your phone or tablet.

Function	Operation
Power on	Take the earbuds out of the charging case or long press multifunction button for 5 seconds until earbuds indicator lights white and you hear a voice prompt "Power on"
Power off	Put the earbuds into the charging case or (when not paired) long press multifunction for 5 seconds until you hear a voice prompt "Power off". If you put only one earbud into the case, the other earbud will continue working
Play/Pause	Press the multifunction button twice
Play Next track	Press the multifunction on the right earphone three times
Play Previous track	Press the multifunction button on the left earphone three times
Answer phone call	Press the multifunction button twice
Hang up	Press the multifunction button twice
Reject phone call	Press and hold the multifunction button for 2 seconds
Voice Assistant	Long press the multifunction button on the left earphone for 2 seconds
Active Noise Canceling	Long press the multifunction button on the right earphone for 2 seconds
Reset earbuds / Clear paired devices	Open the case when earphone in the charging case. Press the button on the charging compartment for 10 seconds to clear the pairing record. After the red and white lights areon for 1 second, the red light is on for 2 seconds.

Safety notice

Please kindly observe rules and regulations for using Bluetooth devices in airplanes, medical facilities, gas stations, chemical plants and other areas where the use of wireless connection is restricted due to the thread of interference with sensitive equipment or due to the presence of flammable materials.
The wireless device may interfere with other communication devices including regular phones, television- and radio receivers, office equipment.
Listening at a high volume for a long time may damage your hearing.
The device is powered by a battery. Improper use of the battery may cause a risk of fire, explosion or other hazards. Please kindly use the battery in a proper way.
Do not disassemble, open, bend, puncture, affect the battery mechanically or immerse in liquids. The battery may explode when damaged. In the event of battery leak, flush the affected area with clean water and seek medical help immediately. In case the battery smells, take it to a safe place away from open flames.
Use of a damaged battery may cause severe injuries.
Do not swallow!
Keep away from children!
Do not leave a fully charged battery connected to a charger as overcharging may shorten its lifetime. The battery runs down if not used.
Do not disassemble the device, avoid a short circuit. Keep the metal contacts of the battery clean.
Do not leave or keep your device in vehicles in hot weather under direct sunlight. This may cause the battery to overheat and reduce its life. The device may shut down or the capacity may not be fully consumed when used outside operating temperature requirements (below -10°C and above +45°C).

Dispose of the battery separately from household.
The product is to be transported in the manufacturer's packing by all means of transport at any distance.

Accesstyle warranty terms and conditions

1. The warranty terms and conditions set forth below comply with the Russian Federation applicable legislation on consumer goods trading.
2. The warranty period of this Product is 1 (one) year starting from the time of the original purchase.
3. The product's lifetime is 2 (two) years and shall commence at the date of purchase, or, failing that, production date;
4. This warranty shall not apply to:
4.1. Cables, adapters, variety of media (discs, memory cards with software), cases, extension cables, clips, variety of holders, package and documents.
4.2. Normal wear and tear or the product's outer surface damages.
4.3. Defects caused by moisture, dampness, extreme temperature, microwave energy, pressure, hit, influence of animals and insects, liquids, food, dust and chemicals entering the product.
4.4. Product, repaired or modified by persons, except those names in paragraph 5.
4.5. Product, misused or used in violation of the user manual.
4.6. Defects caused by use of incompatible equipment or accessories.
5. Warranty service shall be performed by dully authorized bodies: authorized service centers listed on Support webpage: http://www.accesstyle.ru and available on 8-800-250-07-17. During the warranty period any production defects shall be repaired free of charge upon presenting the filled valid warranty certificate and/ or documents indicating the proof of purchase and the date of purchase (cash receipt).

The documents shall contain model name of the product, date of purchase, trade organization details. An authorized body shall be entitled to refuse warranty service in case of absence of the required documents.
6. Warranty period shall be extended to the service period. Replacing of parts, components or the whole package shall not result in a new warranty period for the product or for the replaced parts.
7. Under no circumstances shall the Producer, Importer and organizations authorized by the Importer be liable for any direct, indirect, incidental, special or consequential damage or including but not limited to any loss of profit, loss of use of information or data; information or data restoration costs, loss arising out of use or inability to use Accesstyle products resulted in interruption of a commercial, production or other activity.